Tekron ITR Codes

Type / Power supply / Converter

D x - x x

1	1:	Copper Input	LV Output
2	2:	Copper+Fibre Input	LV Output
3	3:	Copper+Fibre Input	MOSFET Output *

1	1:	Power supply 14-36 Vdc (nominal 24 Vdc)
2	2:	Power supply 20-72 Vdc (nominal 48 Vdc)
3	3:	Power supply 90-300 Vdc (nominal 110 Vdc)

J	J:	With internal DCLS IRIG-B to AM IRIG-B converter [*No J/K selection possible for D3]
K	K:	**Without** internal DCLS IRIG-B to AM IRIG-B converter [*No J/K selection possible for D3]

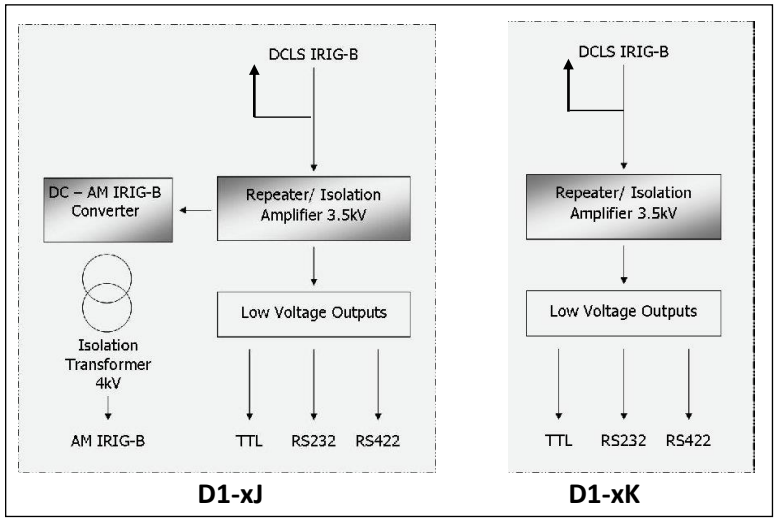

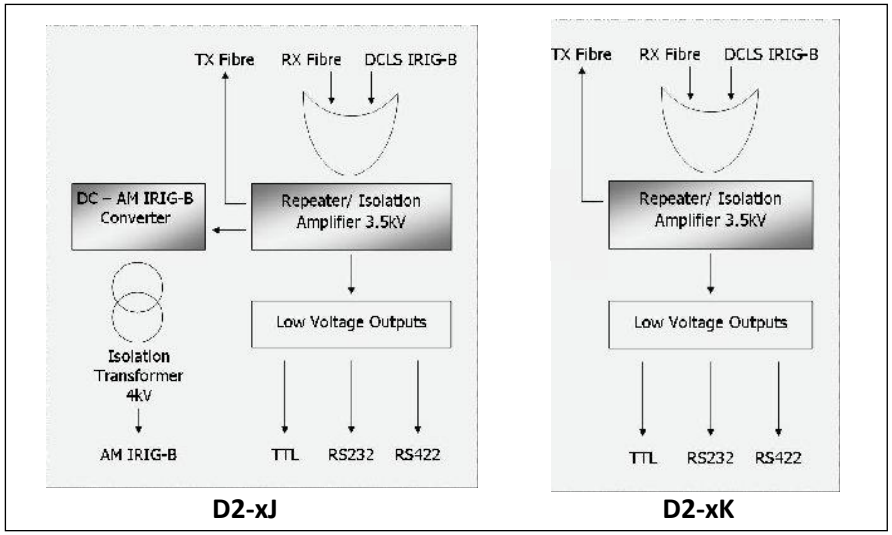

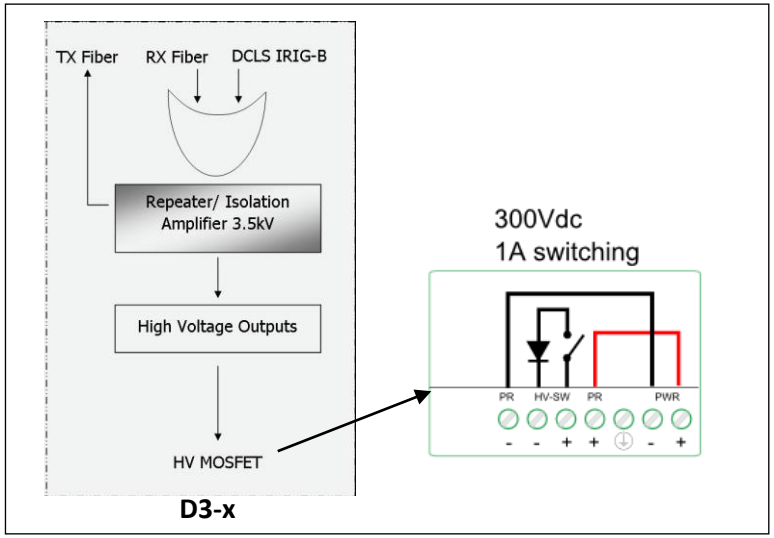

HV Power Measurements & Protection Ltd
Unit 4, 1 Porters Ave, Eden Terrace, Auckland
P O Box 26-074, Epsom, Auckland 1030, New Zealand

Tel: +64-9- 377 2001
Fax: +64-9- 302 2142
Email: info@hvpower.co.nz